12V Victron Lynx Smart BMS NG Split Phase Wiring Diagram

Lithium NG Battery Bank | Lynx Smart BMS NG | (x2) 3kVA Inverter/Chargers
Expandable Solar + Alternator Charging | Advanced Monitoring & Control

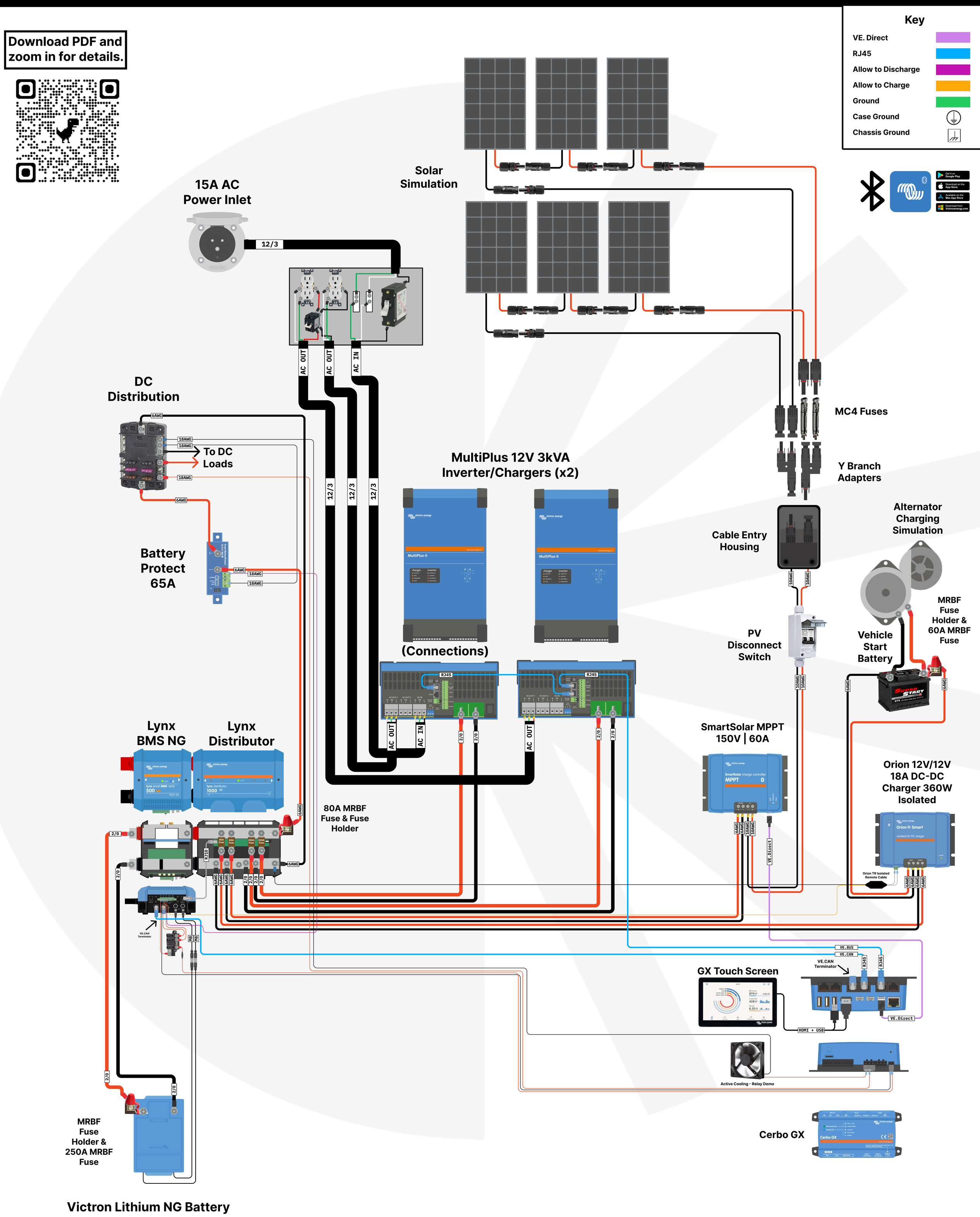

trek

Disclosure: This diagram is for training purposes only. Always follow manufacturer recommendations for battery bank sizing, and ensure solar array is properly sized based on system design considerations.

Copyright 2026 | Trek Systems